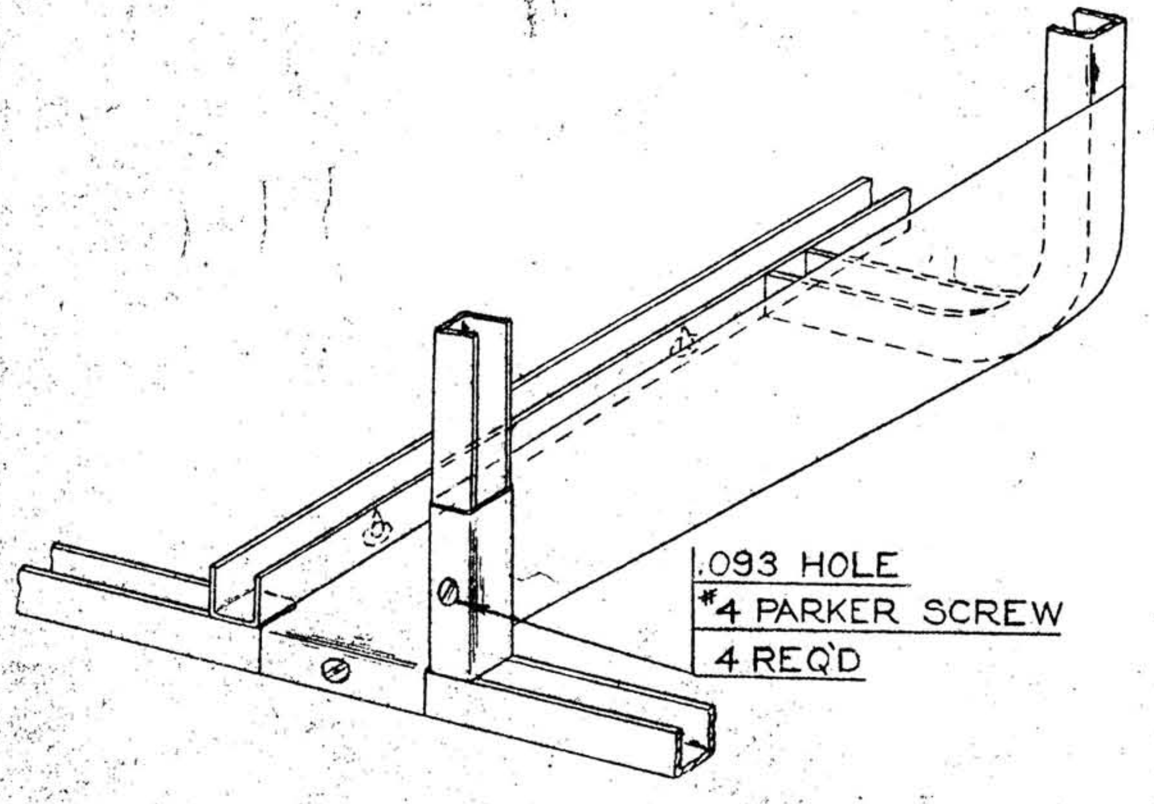
.093 HOLE
#4 PARKER SCREW
4 REQ'D

FIG. 2
6"= 1 FT.

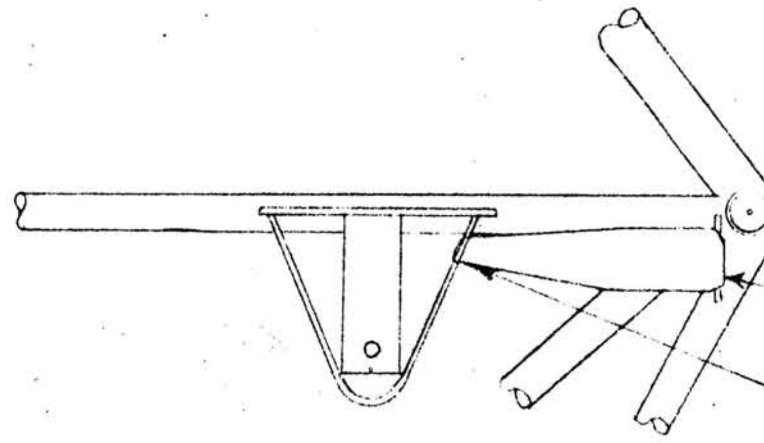
THIS END BENT AROUND
WELDING ROD
THIS END BENT AROUND
THROTTLE BRACKET

FIG. 1
THROTTLE CONTROL
HOUSING INSTALLATION

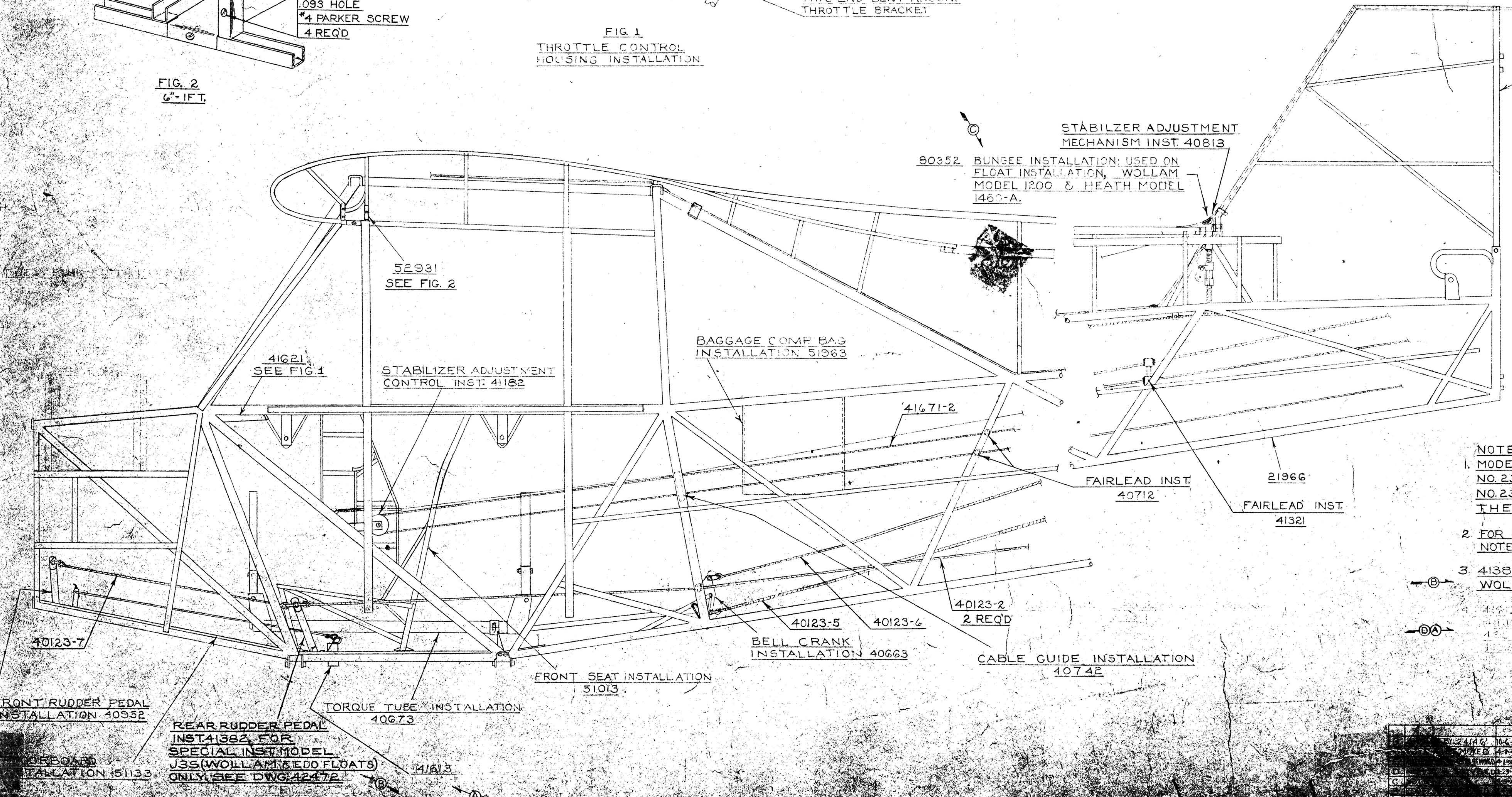
TAIL LIGHT WIRE
INST. 83702
FIN INSTALLATION
41682
STABILZER ADJUSTMENT
MECHANISM INST. 40813
80352 BUNGEE INSTALLATION: USED ON
FLOAT INSTALLATION, WOLLAM
MODEL 1200 & HEATH MODEL
1460-A.
C
52931
SEE FIG. 2
41621
SEE FIG. 1
STABILIZER ADJUSTMENT
CONTROL INST. 41182
BAGGAGE COMP. BAG
INSTALLATION 51963
41671-2
FAIRLEAD INST.
40712
21966
FAIRLEAD INST.
41321
40123-7
40123-5
40123-6
40123-2
2 REQ'D
BELL CRANK
INSTALLATION 40663
CABLE GUIDE INSTALLATION
40742
FRONT SEAT INSTALLATION
51013
TORQUE TUBE INSTALLATION
40673
FRONT RUDDER PEDAL
INSTALLATION 40952
FLOORBOARD
INSTALLATION 51133
REAR RUDDER PEDAL
INST. 41382. FOR
SPECIAL INST. MODEL
J3S (WOLLAM & EDO FLOATS)
ONLY SEE DWG. 42472
41613
B
A E
B
D A
E A
G

NOTES:

1. MODEL J3S FUSELAGE ASS'Y, UNCOVERED (PART NO. 23524-2) SAME AS MODEL J3 ASS'Y (PART NO. 23524) WITH EXCEPTIONS AS NOTED IN THE BILL OF MATERIALS
2. FOR INSTALLATION OF ALL FAIRLEADS NOT NOTED SEE DWG. 40881
3. 41382 NOT USED ON MODEL J3S WITH WOLLAM AND EDO FLOATS.
4. [illegible]

Limits and shop practices, unless otherwise noted, to be in accordance with Piper Specification #9.

PART NO.	NO. REQ.	SIZE / DESCRIPTION / MATERIAL
41321	1	FAIRLEAD INST.
40881	6	
40712	1	
40123-7	2	CABLES
40123-6	1	
40123-5	1	
40123-2	2	
41671-2	1	
40813	1	STAB. ADJ. MECH. INST.
80352	1	BUNGEE INSTALLATION: USED ON FLOAT INST. WOLLAM MODEL 1200 & HEATH MODEL 1460-A
42472	1	RUDDER PEDAL INSTALLATION MODEL J3S (WOLLAM & EDO FLOATS) ONLY
-2	1	ASS'Y. CONSISTS OF 23524 PLUS INST. 80352, [illegible] WITH INST. SEE NOTE 1, [illegible] & 2
#4	8	1/4 LONG TYPE A STOVE HEAD P.K. SCREW
52931	2	CABIN FILLET
83702	1	TAIL LIGHT WIRE INST.
41621	1	THROTTLE CONTROL HOUSING
51133	1	FLOOR BOARD INST.
40952	2	FRONT RUDDER PEDAL INST.
41382	2	REAR RUDDER PEDAL INST. (SEE NOTE 3)
40673	1	TORQUE TUBE INST.
51013	1	FRONT SEAT INST.
40663	1	BELL CRANK INST.
40742	1	CABLE GUIDE INST.
[illegible]		[illegible]
41682	1	FIN INST.
41613	1	BRAKE INST.
51963	1	BAGGAGE COMP. INST.
41182	1	STAB. ADJUSTMENT CONTROL INST.
[illegible]		
21966	1	FUSELAGE + SUPERST. ASS'Y.

SCALE: 2" = 1 FT. & NOTED

[illegible]	BY 24146	10-6-43	M.G.S.
[illegible]	REMOVED	4-1-43	M.G.S.
[illegible]	REWORKED	4-1-43	M.G.S.
D	[illegible]	1-25-43	J.C.
C	[illegible]		
B	[illegible]		
A	[illegible]		
LET.	[illegible]		BY

MODEL	PER SHIP	NEXT ASS'Y	SUPERSEDES	SUPERSEDED BY
J3	1	23568		24146

PIPER AIRCRAFT CORP.
LOCK HAVEN, PENNA.

DRAWN	CHECKED	APPROVED
McRAE	O.E.V.	
12-12-42	12-12-42	

FUSELAGE ASSEMBLY UNCOVERED

23524